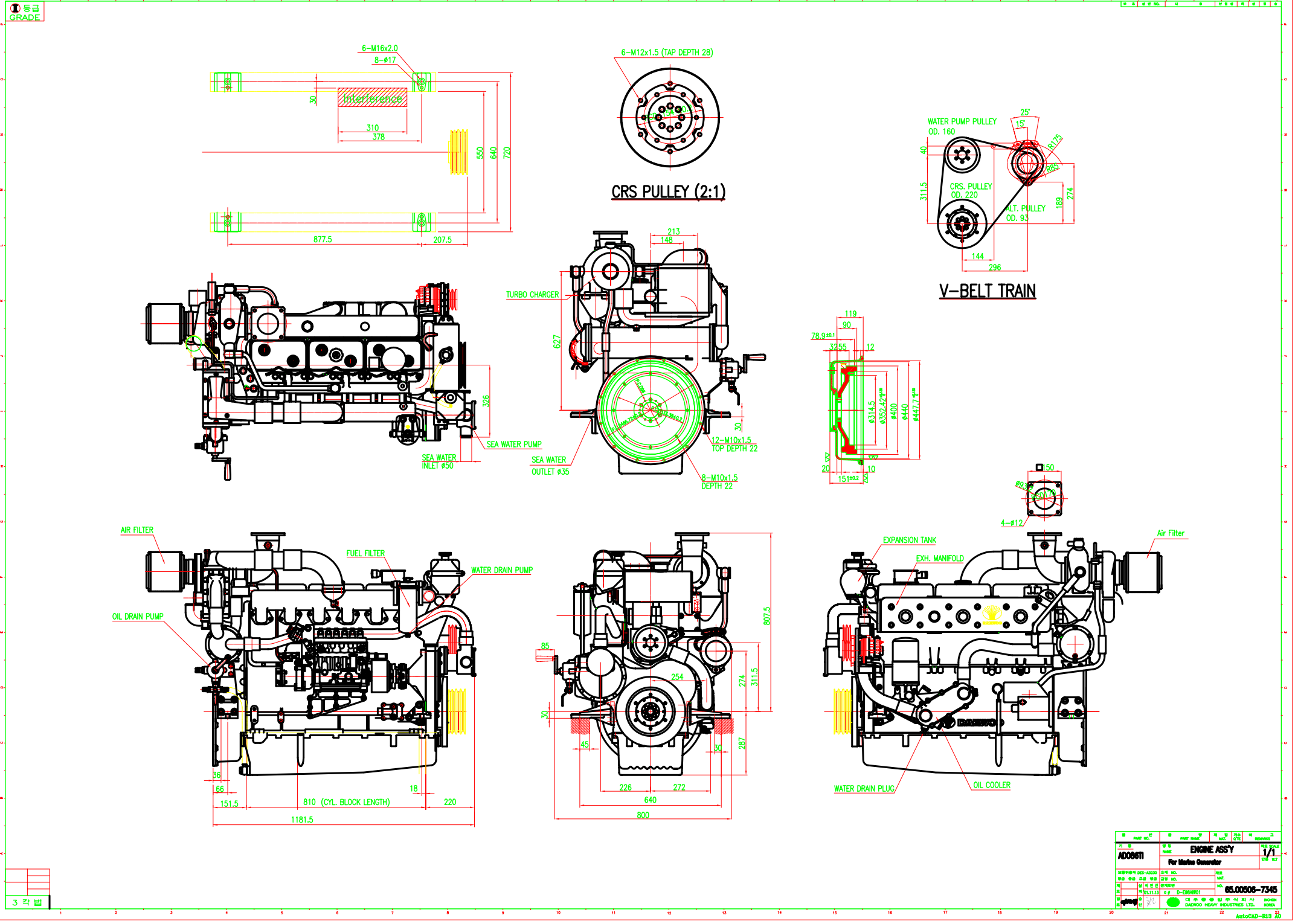

6-M16x2.0
8-ø17
Interference
30
310
378
550
640
720
877.5
207.5
6-M12x1.5 (TAP DEPTH 28)
CRS PULLEY (2:1)
WATER PUMP PULLEY
OD. 160
25°
15°
R175
R85
40
311.5
CRS. PULLEY
OD. 220
ALT. PULLEY
OD. 93
189
274
144
296
V-BELT TRAIN
213
148
TURBO CHARGER
627
326
SEA WATER PUMP
SEA WATER
INLET ø50
SEA WATER
OUTLET ø35
12-M10x1.5
TOP DEPTH 22
8-M10x1.5
DEPTH 22
30
119
90
78.9±0.1
32.55
12
ø314.5
ø352.42
ø400
ø440
ø447.7
20
10
151±0.2
50
4-ø12
AIR FILTER
FUEL FILTER
WATER DRAIN PUMP
OIL DRAIN PUMP
36
66
151.5
810 (CYL. BLOCK LENGTH)
18
220
1181.5
807.5
85
254
274
311.5
30
45
30
287
226
272
640
800
EXPANSION TANK
EXH. MANIFOLD
Air Filter
WATER DRAIN PLUG
OIL COOLER
DAEWOO
3 각 법
PART NO.
PART NAME
MAT.
REMARKS
AD086TI
ENGINE ASS'Y
For Marine Generator
1/1
DES-A3230
01.11.13
D-E98AW01
65.00506-7345
DAEWOO HEAVY INDUSTRIES LTD.
INCHON KOREA
AutoCAD-R13 A0