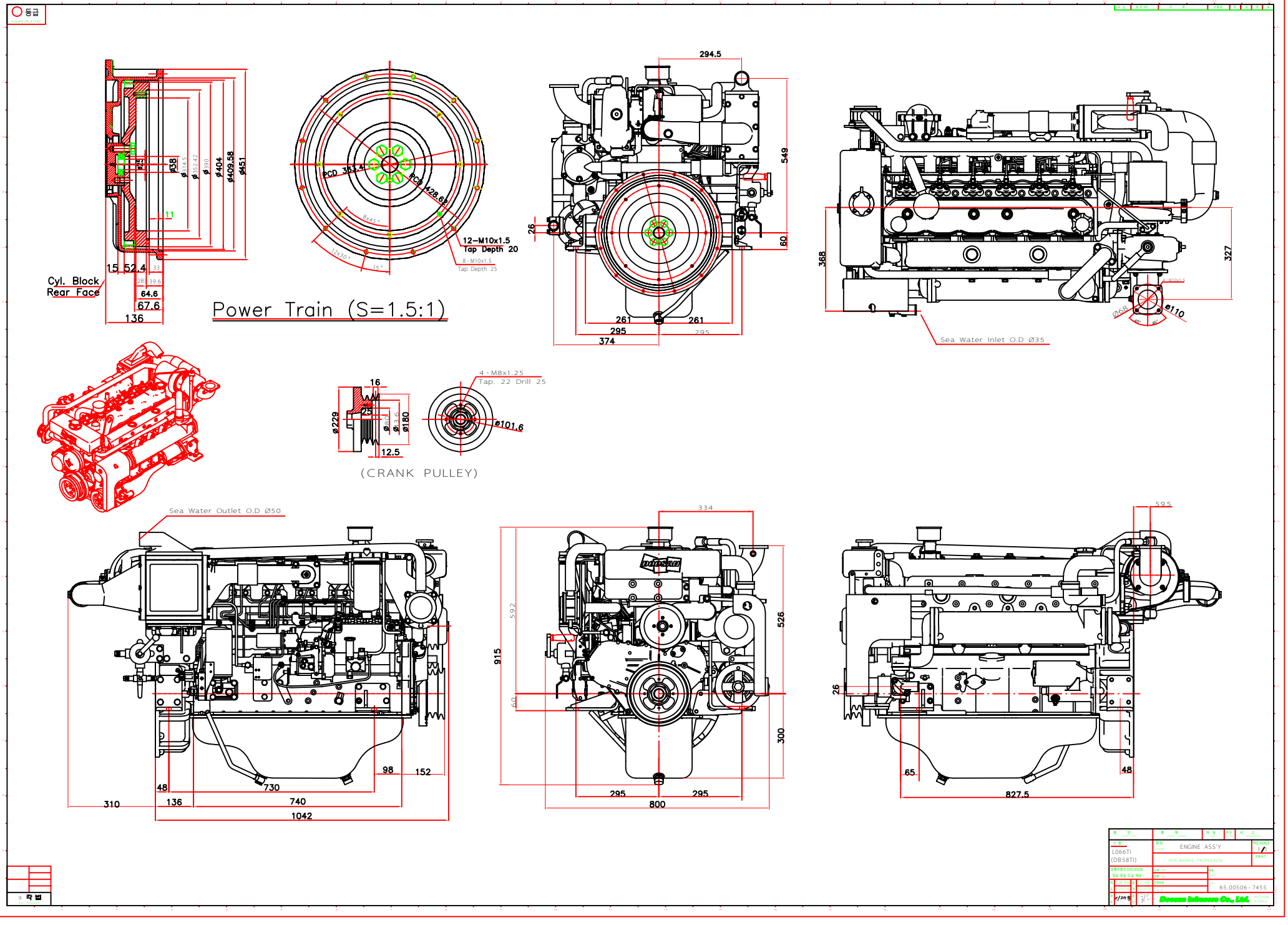

Power Train (S=1.5:1)
Cyl. Block Rear Face
15 52.4
64.6
67.6
136
ø38
ø404
ø409.58
ø451
PCD 353.4
PCD 428.62
12-M10x1.5 Tap Depth 20
8-M10x1.5 Tap Depth 25
294.5
549
26
60
261
295
374
368
327
Sea Water Inlet O.D Ø35
ø110
Ø68
4-M8x1.25 Tap. 22 Drill 25
16
25
ø229
ø180
12.5
ø101.6
(CRANK PULLEY)
Sea Water Outlet O.D Ø50
310
48
136
730
740
1042
98
152
334
915
592
526
300
295
800
59.5
26
65
48
827.5
L066TI (DB58TI)
ENGINE ASS'Y
FOR MARINE PROPULSION
65.00506-7455
Doosan Infracore Co., Ltd.