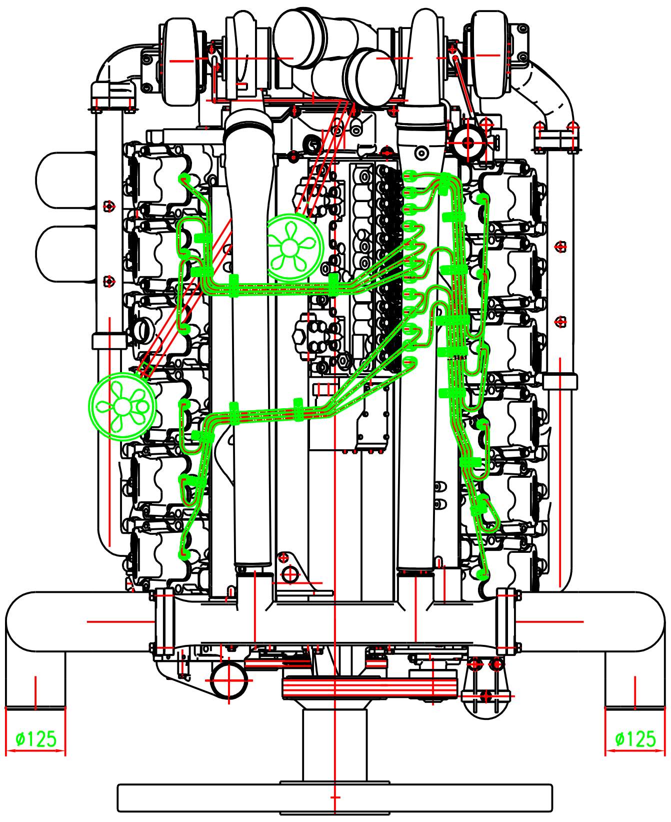

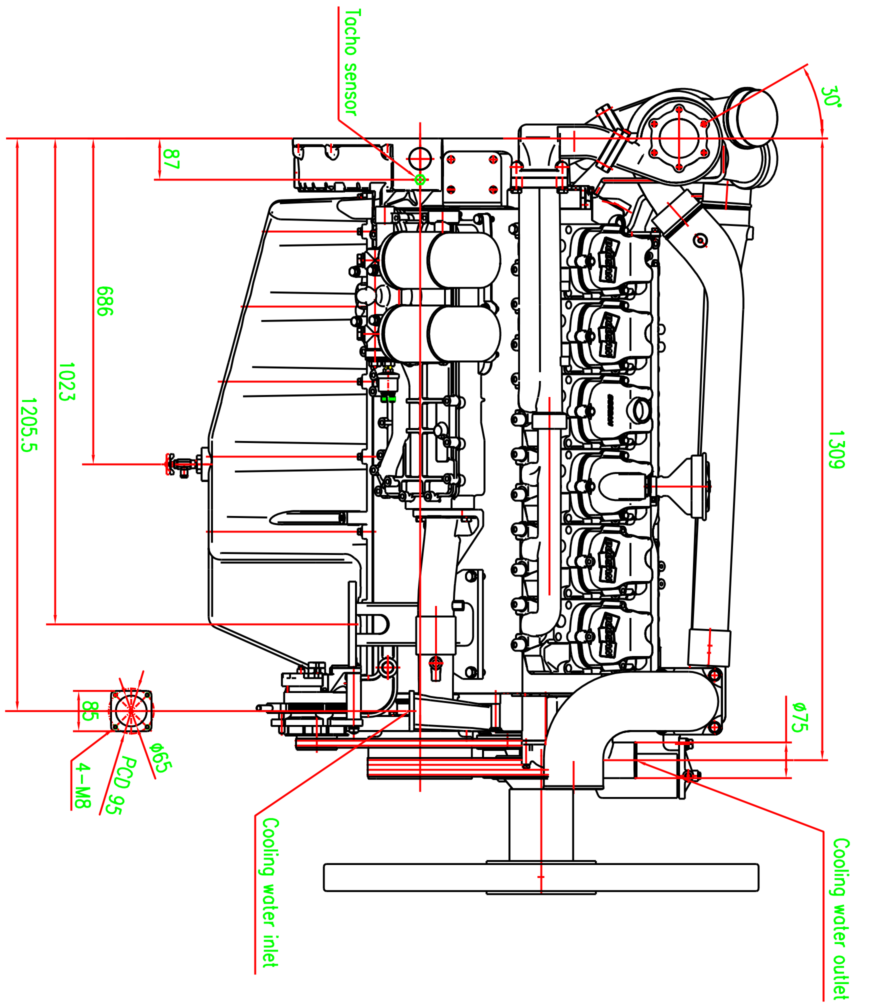

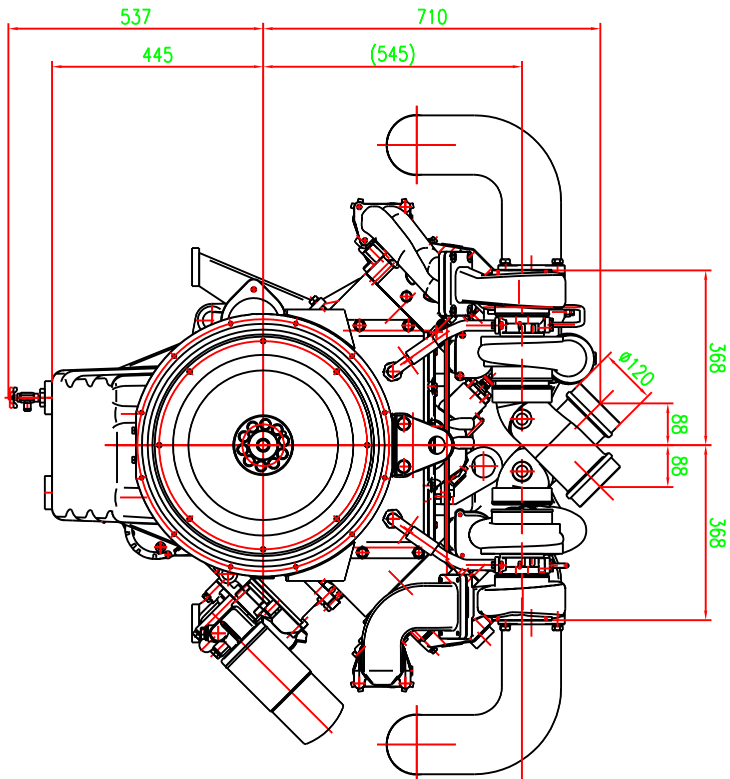

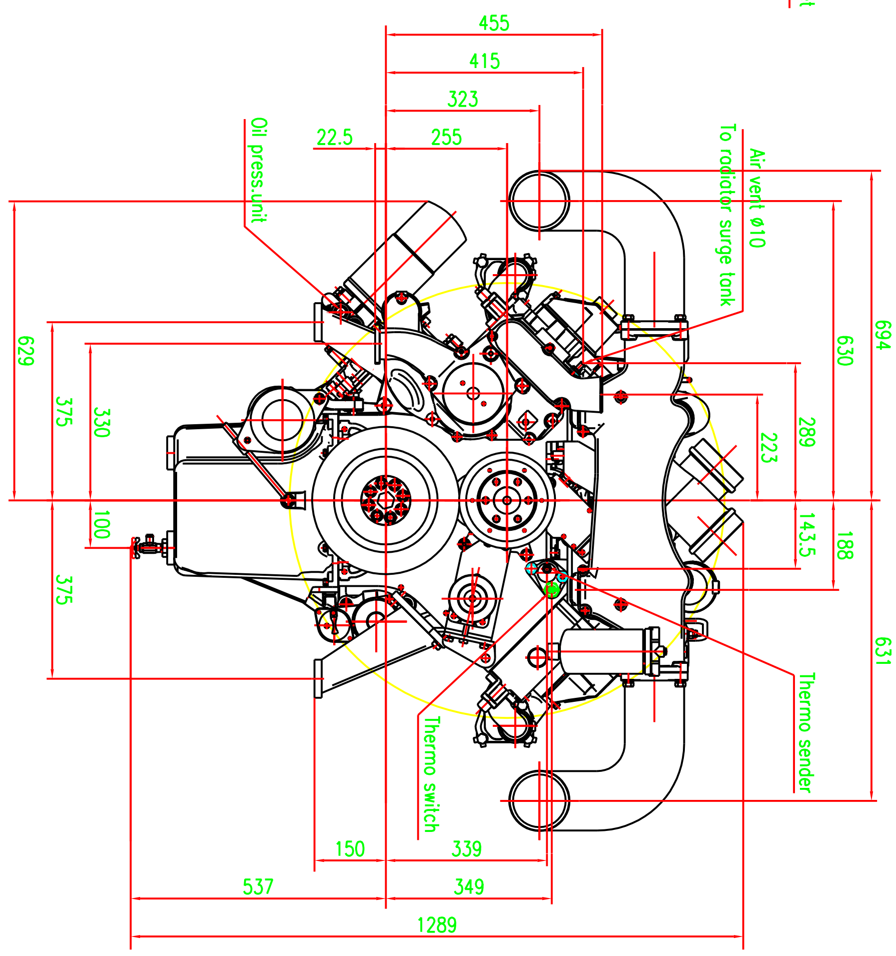

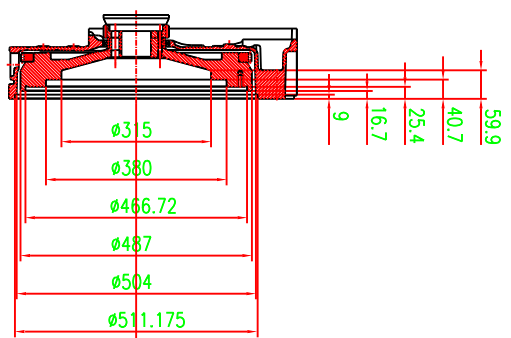

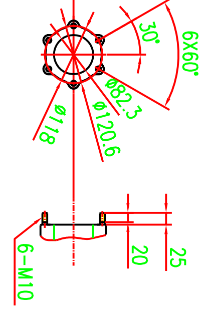

POWER TRAIN

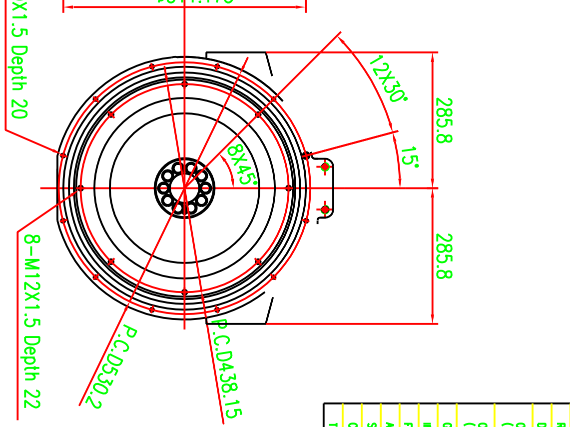

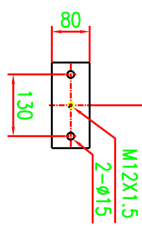

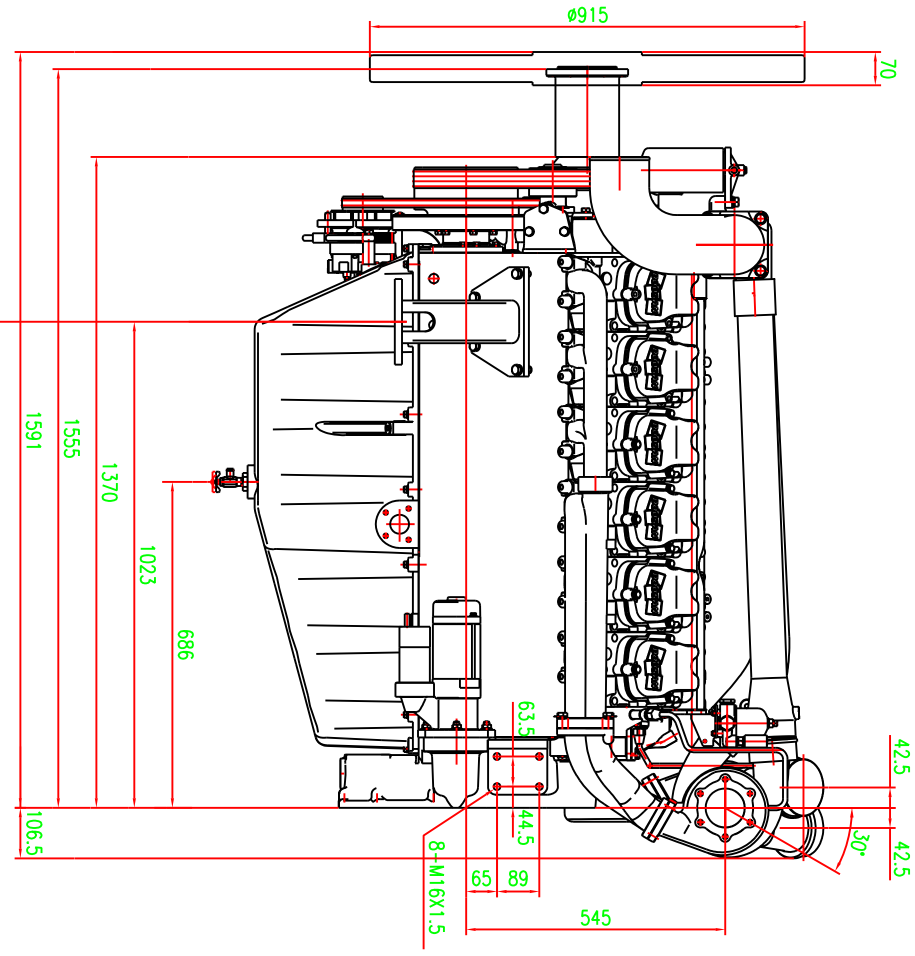

SPECIFICATION	
MODEL	P222LE
CYCLE	4
NO. ARRANGEMENT OF CYLINDER	12 VERTICAL
BORE	128 mm
STROKE	142 mm
COMBUSTION SYSTEM	TOROIDAL COMBUSTION
COMPRESSION RATIO	15 : 1
SWEPT VOLUME	21,942 cc
ROTATION - VIEW ON REAR OF ENGINE	COUNTER CLOCK WISE
DRY ENGINE WEIGHT	1575 kg
OUTPUT (1800rpm) Stand-by	883ps, 649kW
OUTPUT (1800rpm) Prime	803ps, 591kW
OUTPUT (1500rpm) Stand-by	781ps, 574kW
OUTPUT (1500rpm) Prime	723ps, 532kW
GOVERNOR	GAC ELECTRIC
INJECTION NOZZLE OPENING PRESSURE	220 bar
FIRING ORDER	1-12-5-8-3-10-6-7-2-11-4-9
ALTERNATOR	24V x 45A
STARTER	24V x 7.0 kW
COOLING FAN	7BLADES, ø915, BLOWER
THERMOSTAT OPENING TEMPERATURE	71℃

3각법 3D ANGLE

Ⅱ 등급 GRADE

PART NO.: P222LE (EAYOA_F)

PART NAME: ENGINE ASS'Y

SCALE 1 : 1

DES-A3230

YS.KIM '06.10.25

NO. 65.00512-7011

Doosan Infracore Co., Ltd. INCHON KOREA