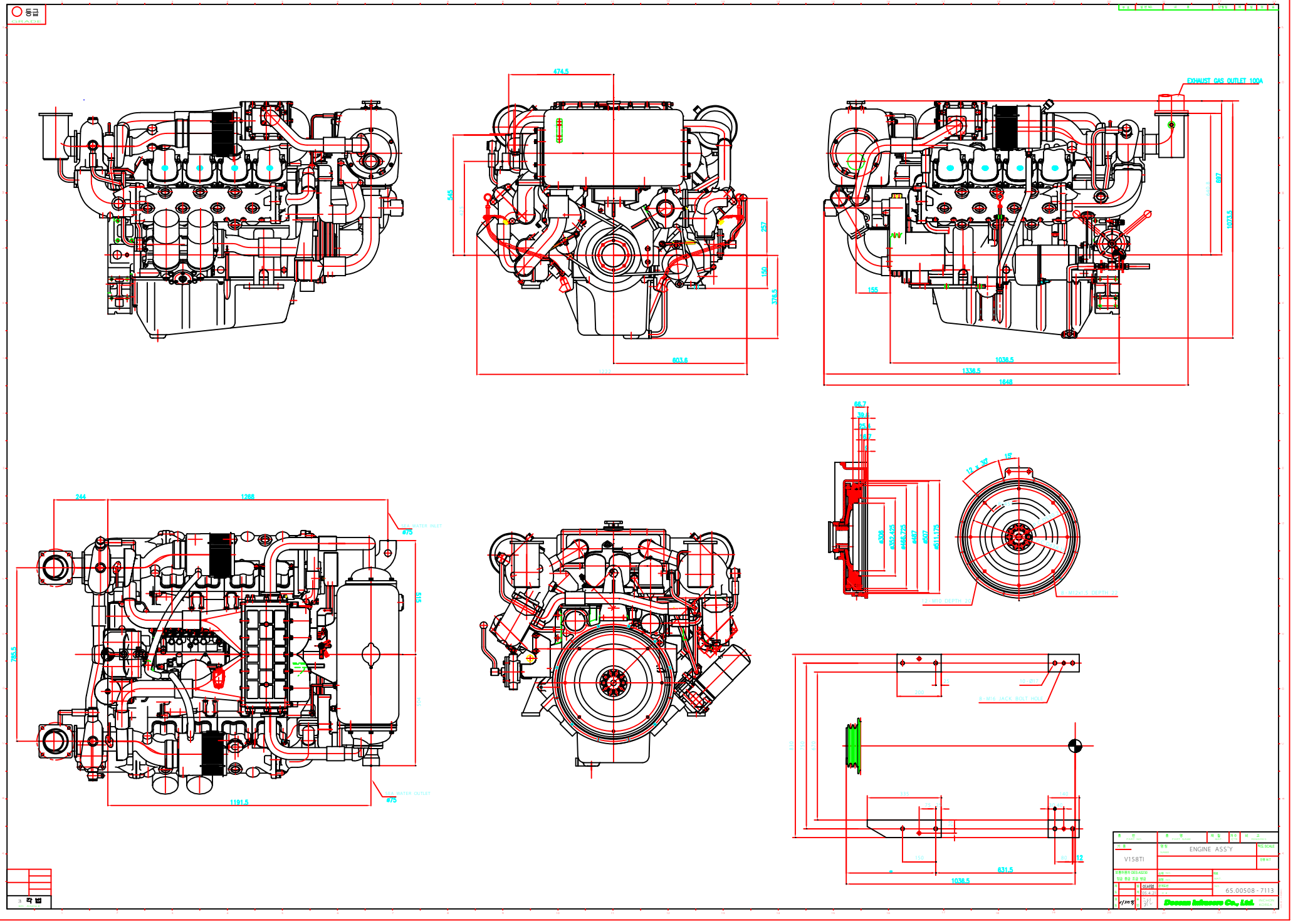

EXHAUST GAS OUTLET 100A
474.5
545
257
150
376.5
603.6
1222
697
1073.5
155
1036.5
1336.5
1648
244
1268
SEA WATER INLET
ø75
515
765.5
1191.5
SEA WATER OUTLET
ø75
66.7
39.4
25.4
16.7
ø308
ø352.425
ø466.725
ø487
ø507
ø511.175
12 x 30°
15°
12-M10 DEPTH 22
8-M12x1.5 DEPTH 22
200
10-Ø12
8-M16 JACK BOLT HOLE
335
75
140
150
80
12
631.5
1036.5
3 각 법
ENGINE ASS'Y
V158TI
65.00508-7113
Doosan Infracore Co., Ltd.